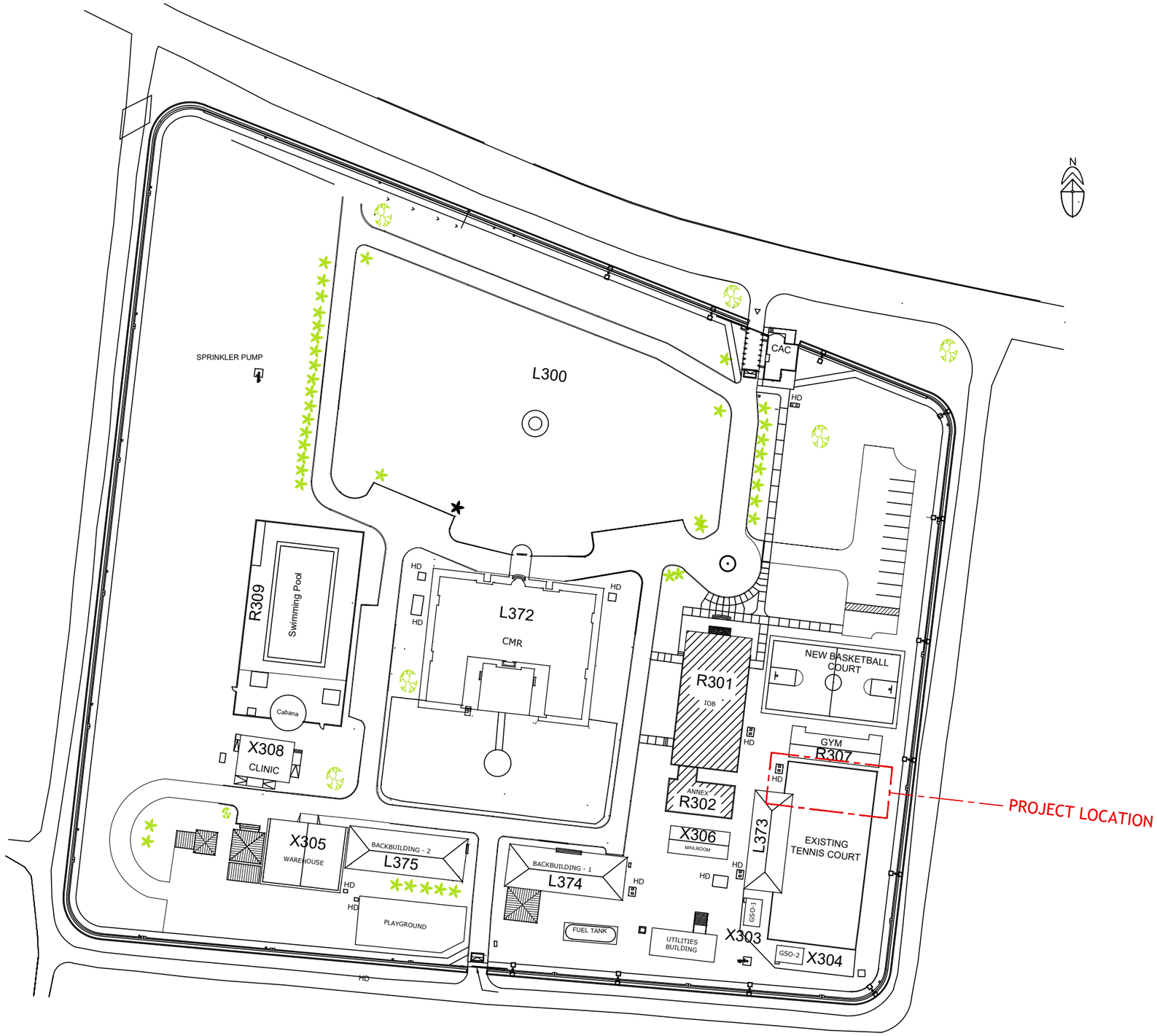

PROJECT LOCATION

SCALE 1:1000

SBU SENSITIVE BUT UNCLASSIFIED

DEPARTMENT OF STATE
UNITED STATES OF AMERICA

FACILITIES MANAGEMENT
BANGKOK THAILAND

THIS DOCUMENT IS THE PROPERTY OF THE U.S. GOVERNMENT. FURTHER REPRODUCTION AND/OR DISTRIBUTION IS PROHIBITED WITHOUT THE EXPRESS WRITTEN PERMISSION OF: OFFICE OF OVERSEAS BUILDINGS OPERATIONS, U.S. DEPARTMENT OF STATE, WASHINGTON DC, 20522-0620. INFORMATION ON THIS DOCUMENT IS NOT TO BE ALTERED EXCEPT WITH THE WRITTEN APPROVAL OF THE INDIVIDUAL WHOSE SEAL APPEARS HEREON.

APPROVED BY

DATE: / /

FACILITIES MANAGEMENT ACKNOWLEDGEMENT

DATE: / /

REV. NO.	DATE	DESCRIPTION

ARCHITECT: FACILITIES MANAGEMENT

ENGINEER(S): FACILITIES MANAGEMENT

PROJECT TITLE: DILI COMPOUND TENNIS COURT PERIMETER WALL REPLACEMENT

DRAWING TITLE: PROJECT LOCATION

DRAWN BY: TP.	DATE: JUL 16, 2020
CHECKED BY: SS.	DATE: JUL 16, 2020

SCALE: 1:1000

DWG NO.: G-01

CADD FILE: Tennis Court Perimeter wall.dwg

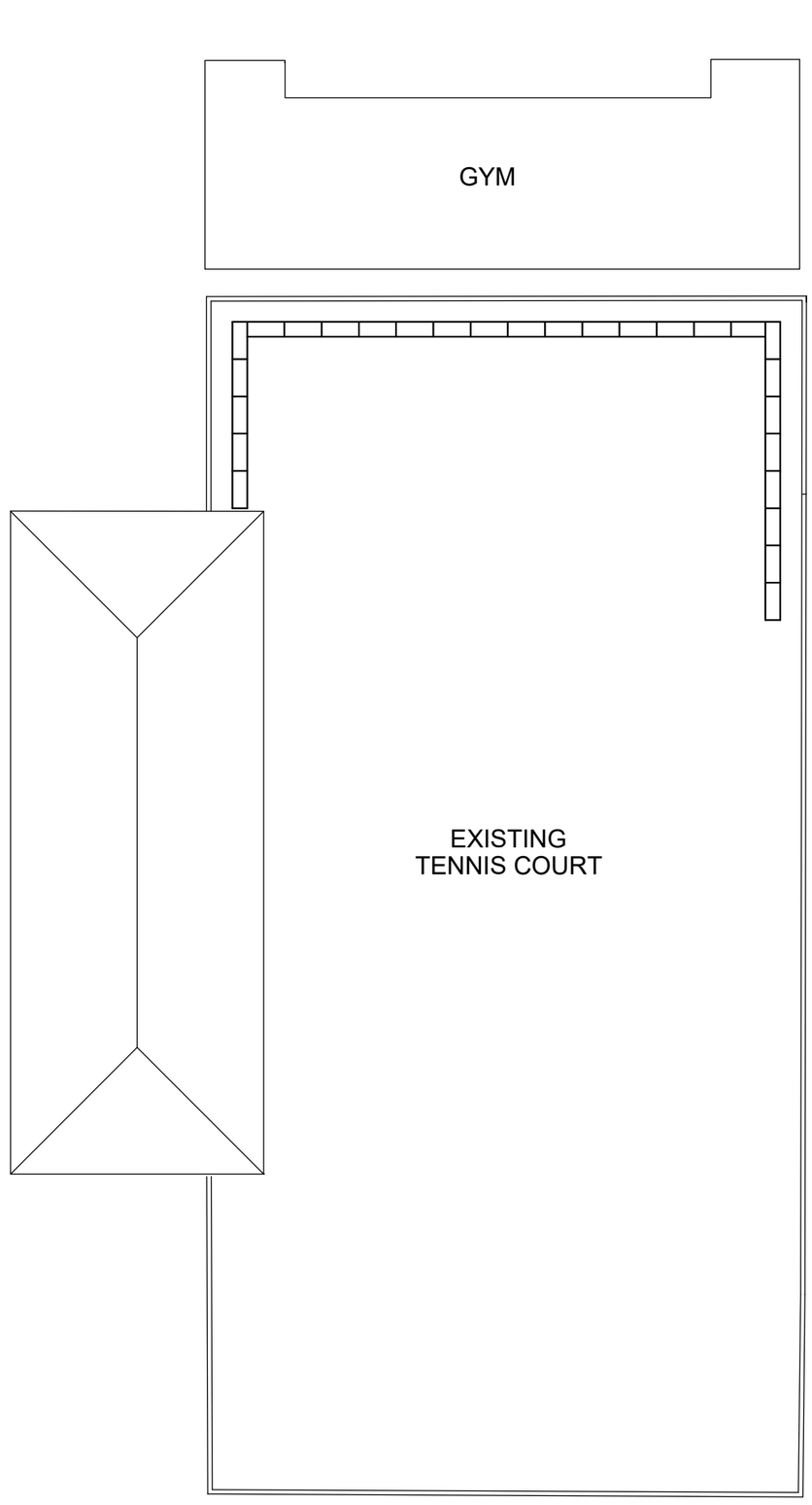

EXISTING LAYOUT PLAN

SCALE 1: 200

SBU SENSITIVE BUT UNCLASSIFIED

0 1.00 2.00 5.00m
SCALE = 1:200

FACILITIES MANAGEMENT
BANGKOK THAILAND

THIS DOCUMENT IS THE PROPERTY OF THE U.S. GOVERNMENT. FURTHER REPRODUCTION AND/OR DISTRIBUTION IS PROHIBITED WITHOUT THE EXPRESS WRITTEN PERMISSION OF: OFFICE OF OVERSEAS BUILDINGS OPERATIONS, U.S. DEPARTMENT OF STATE, WASHINGTON DC, 20522-0620. INFORMATION ON THIS DOCUMENT IS NOT TO BE ALTERED EXCEPT WITH THE WRITTEN APPROVAL OF THE INDIVIDUAL WHOSE SEAL APPEARS HEREON.

APPROVED BY

DATE: / /

FACILITIES MANAGEMENT ACKNOWLEDGEMENT

DATE: / /

REV. NO.	DATE	DESCRIPTION

ARCHITECT: FACILITIES MANAGEMENT

ENGINEER(S): FACILITIES MANAGEMENT

PROJECT TITLE: DILI COMPOUND TENNIS COURT PERIMETER WALL REPLACEMENT

DRAWING TITLE: EXISTING LAYOUT PLAN

DRAWN BY: TP.	DATE: JUL 16, 2020
CHECKED BY: SS.	DATE: JUL 16, 2020

SCALE: 1:200

DWG NO.: G-02

CADD FILE: Tennis Court Perimeter wall.dwg

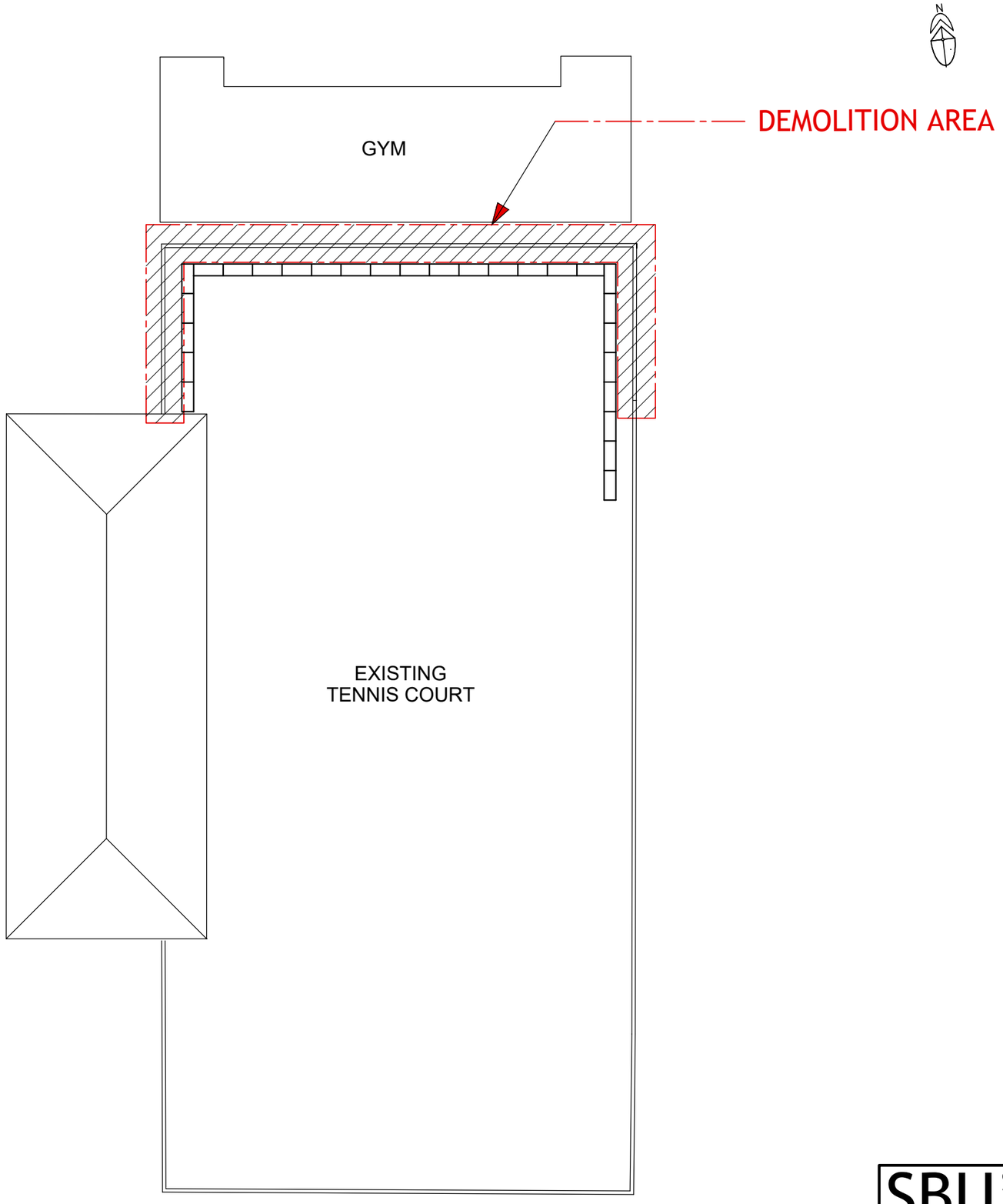

DEMOLITION PLAN

SCALE 1:200

SBU SENSITIVE BUT UNCLASSIFIED

0 1.00 2.00 5.00m
SCALE = 1:200

FACILITIES MANAGEMENT
BANGKOK THAILAND

THIS DOCUMENT IS THE PROPERTY OF THE U.S. GOVERNMENT. FURTHER REPRODUCTION AND/OR DISTRIBUTION IS PROHIBITED WITHOUT THE EXPRESS WRITTEN PERMISSION OF: OFFICE OF OVERSEAS BUILDINGS OPERATIONS, U.S. DEPARTMENT OF STATE, WASHINGTON DC, 20522-0620. INFORMATION ON THIS DOCUMENT IS NOT TO BE ALTERED EXCEPT WITH THE WRITTEN APPROVAL OF THE INDIVIDUAL WHOSE SEAL APPEARS HEREON.

APPROVED BY

DATE: / /

FACILITIES MANAGEMENT ACKNOWLEDGEMENT

DATE: / /

REV. NO.	DATE	DESCRIPTION

ARCHITECT: FACILITIES MANAGEMENT

ENGINEER(S): FACILITIES MANAGEMENT

PROJECT TITLE: DILI COMPOUND TENNIS COURT PERIMETER WALL REPLACEMENT

DRAWING TITLE: DEMOLITION PLAN

DRAWN BY: TP.	DATE: JUL 16, 2020
CHECKED BY: SS.	DATE: JUL 16, 2020

SCALE: 1:200

DWG NO.: G-03

CADD FILE: Tennis Court Perimeter wall.dwg

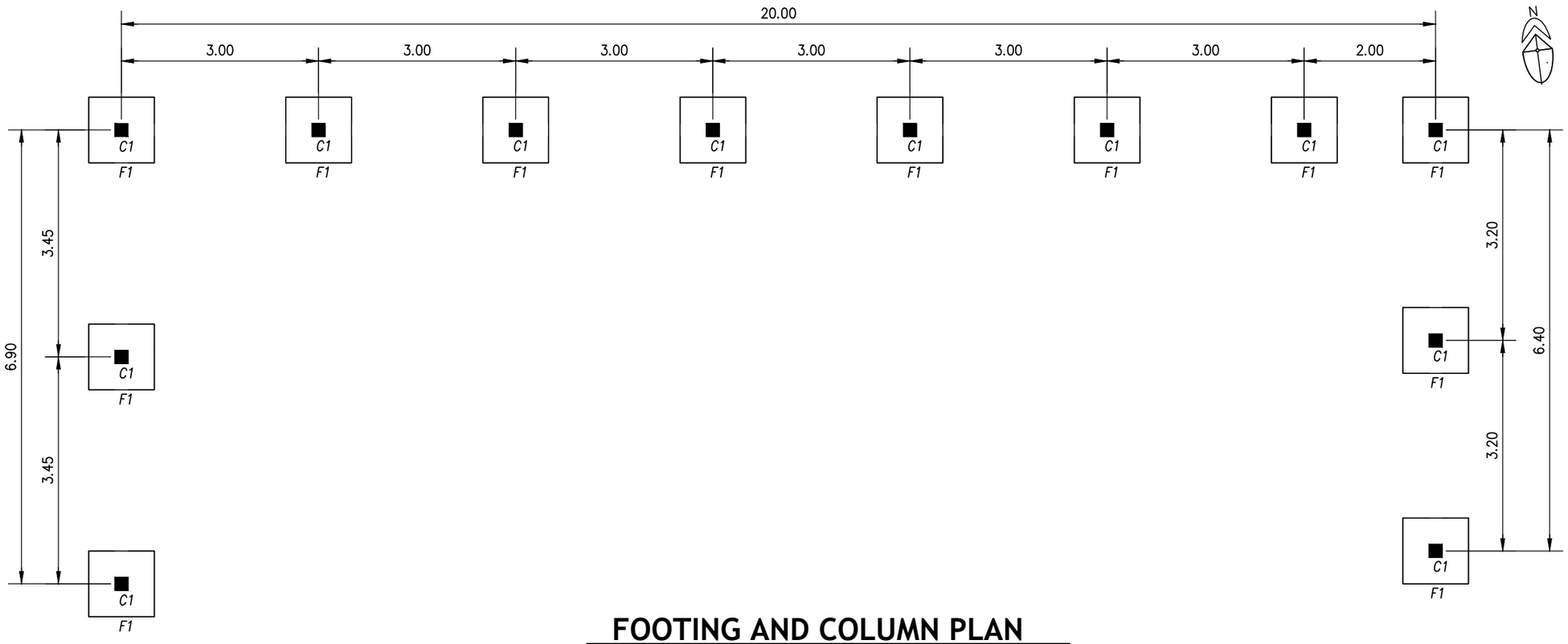

FOOTING AND COLUMN PLAN

SCALE 1:75

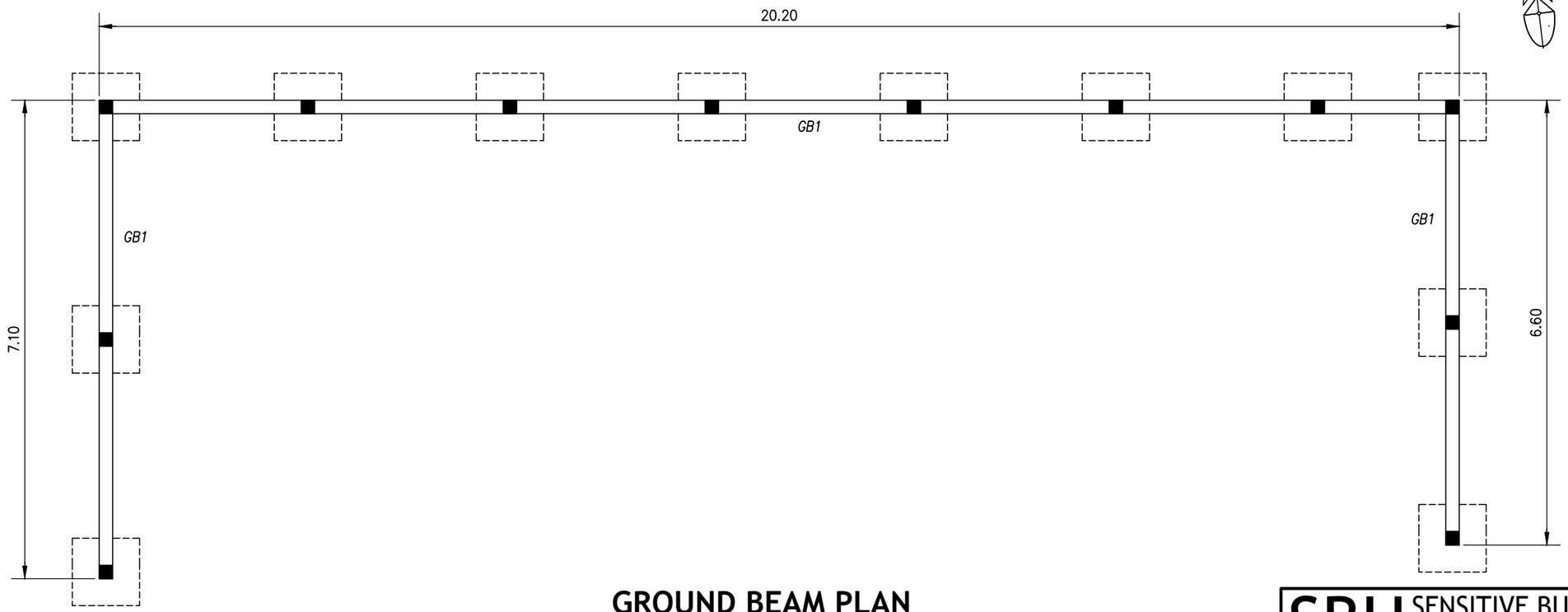

GROUND BEAM PLAN

SCALE 1:75

SBU SENSITIVE BUT UNCLASSIFIED

DEPARTMENT OF STATE
UNITED STATES OF AMERICA

FACILITIES MANAGEMENT
BANGKOK THAILAND

THIS DOCUMENT IS THE PROPERTY OF THE U.S. GOVERNMENT. FURTHER REPRODUCTION AND/OR DISTRIBUTION IS PROHIBITED WITHOUT THE EXPRESS WRITTEN PERMISSION OF: OFFICE OF OVERSEAS BUILDINGS OPERATIONS, U.S. DEPARTMENT OF STATE, WASHINGTON DC, 20522-0620. INFORMATION ON THIS DOCUMENT IS NOT TO BE ALTERED EXCEPT WITH THE WRITTEN APPROVAL OF THE INDIVIDUAL WHOSE SEAL APPEARS HEREON.

APPROVED BY

DATE: / /

FACILITIES MANAGEMENT ACKNOWLEDGEMENT

DATE: / /

REV. NO.	DATE	DESCRIPTION

ARCHITECT: FACILITIES MANAGEMENT

ENGINEER(S): FACILITIES MANAGEMENT

PROJECT TITLE: DILI COMPOUND TENNIS COURT PERIMETER WALL REPLACEMENT

DRAWING TITLE: FOOTING, COLUMN, GROUND BEAM PLAN

DRAWN BY: TP.	DATE: JUL 16, 2020
CHECKED BY: SS.	DATE: JUL 16, 2020

SCALE: 1:75

DWG NO.: G-04

CADD FILE: Tennis Court Perimeter wall.dwg

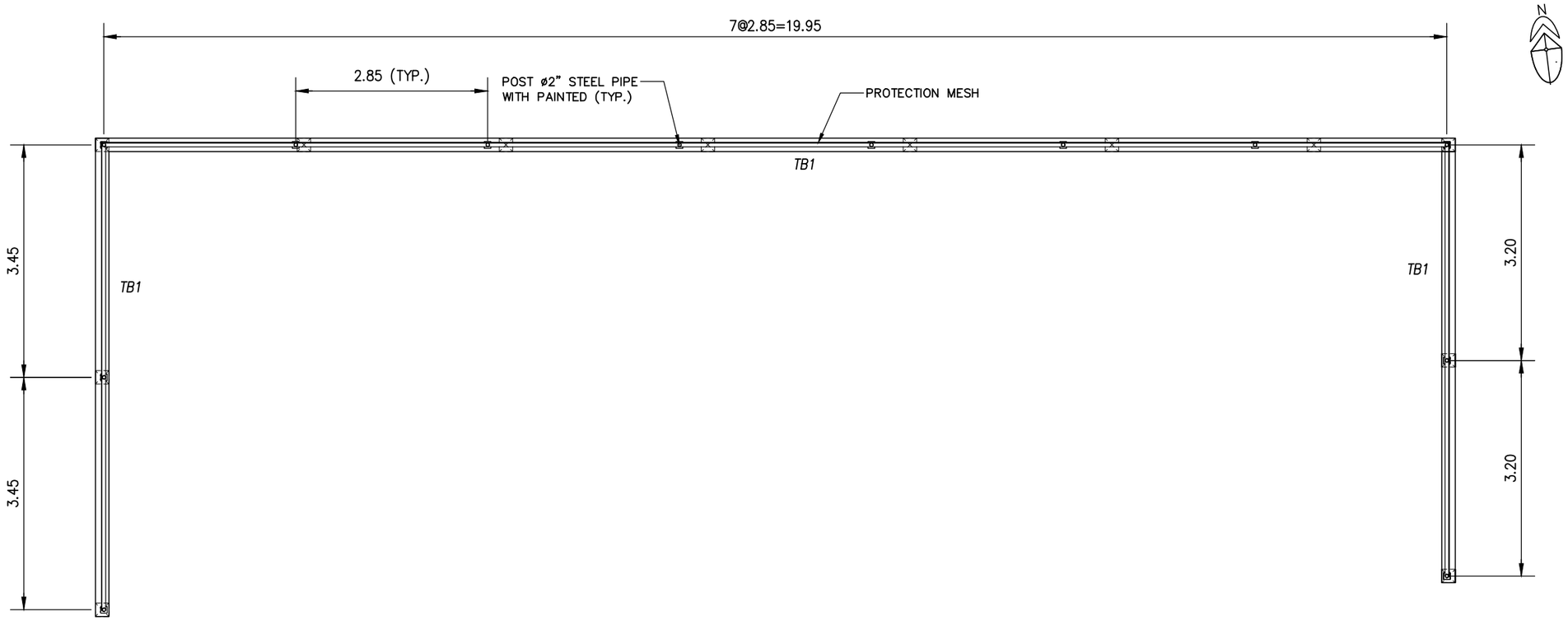

TOP BEAM AND MESH PROTECTION FRAMING PLAN

SCALE 1:75

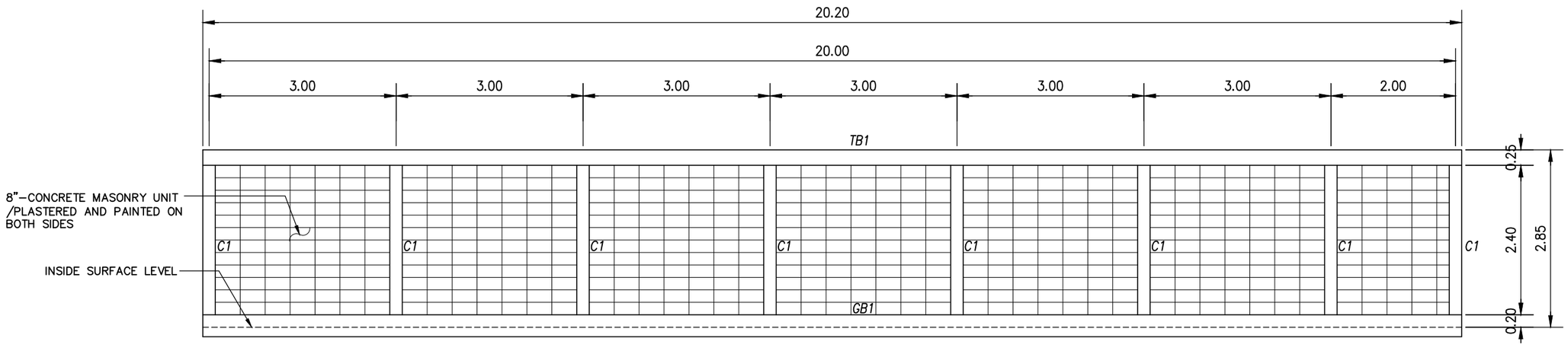

NOTE:

1. FINISHED FLOOR TO BE VERIFIED ON SITE. EXCAVATE EXISTING SOIL AND REPLACE W/ STRUCTURAL FILL OR SELECTED MATERIAL.
2. 8"–CONCRETE MASONRY UNIT WALL TO BE PLASTERED AND PAINTED (MATCHED WITH EXISTING OR ADJACENT BUILDING) ON BOTH SIDES .
3. GROUND BETWEEN NEW PERIMETER WALL AND EXISTING GYM MUST BE BACKFILLED AND LEVELED TO MATCH WITH EXISTING .

STRUCTURAL ELEVATION

SCALE 1:75

SBU SENSITIVE BUT UNCLASSIFIED

DEPARTMENT OF STATE
UNITED STATES OF AMERICA

FACILITIES MANAGEMENT
BANGKOK THAILAND

THIS DOCUMENT IS THE PROPERTY OF THE U.S. GOVERNMENT. FURTHER REPRODUCTION AND/OR DISTRIBUTION IS PROHIBITED WITHOUT THE EXPRESS WRITTEN PERMISSION OF: OFFICE OF OVERSEAS BUILDINGS OPERATIONS, U.S. DEPARTMENT OF STATE, WASHINGTON DC, 20522-0620. INFORMATION ON THIS DOCUMENT IS NOT TO BE ALTERED EXCEPT WITH THE WRITTEN APPROVAL OF THE INDIVIDUAL WHOSE SEAL APPEARS HEREON.

APPROVED BY

DATE: / /

FACILITIES MANAGEMENT ACKNOWLEDGEMENT

DATE: / /

REV. NO.	DATE	DESCRIPTION

ARCHITECT: FACILITIES MANAGEMENT

ENGINEER(S): FACILITIES MANAGEMENT

PROJECT TITLE: DILI COMPOUND TENNIS COURT PERIMETER WALL REPLACEMENT

DRAWING TITLE: TOP BEAM AND MESH PROTECTION FRAMING PLAN AND STRUCTURAL ELEVATION

DRAWN BY: TP.	DATE: JUL 16, 2020
CHECKED BY: SS.	DATE: JUL 16, 2020

SCALE: 1:75

DWG NO.: G-05

CADD FILE: Tennis Court Perimeter wall.dwg

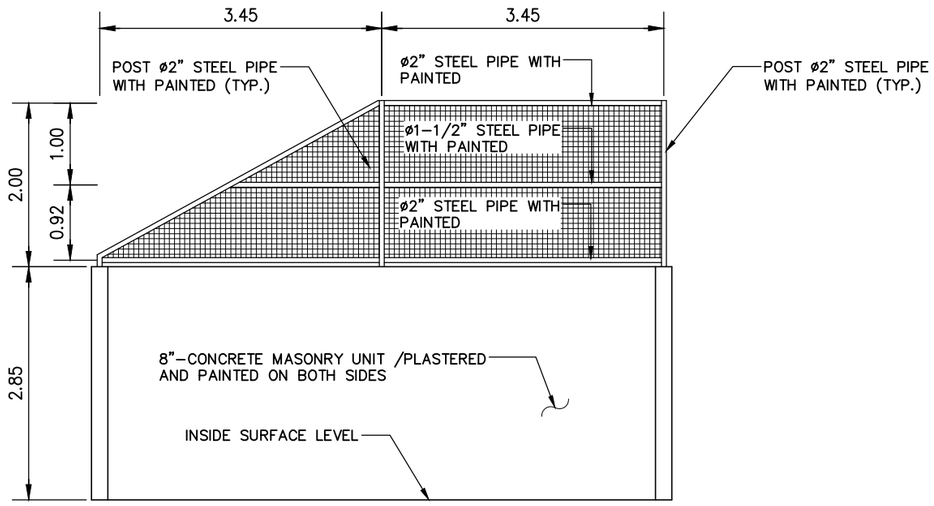

WEST ELEVATION

SCALE 1:75

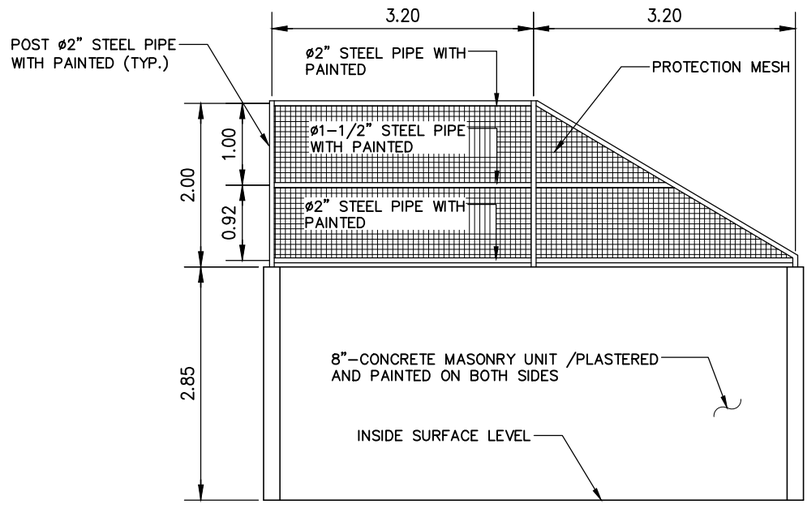

EAST ELEVATION

SCALE 1:75

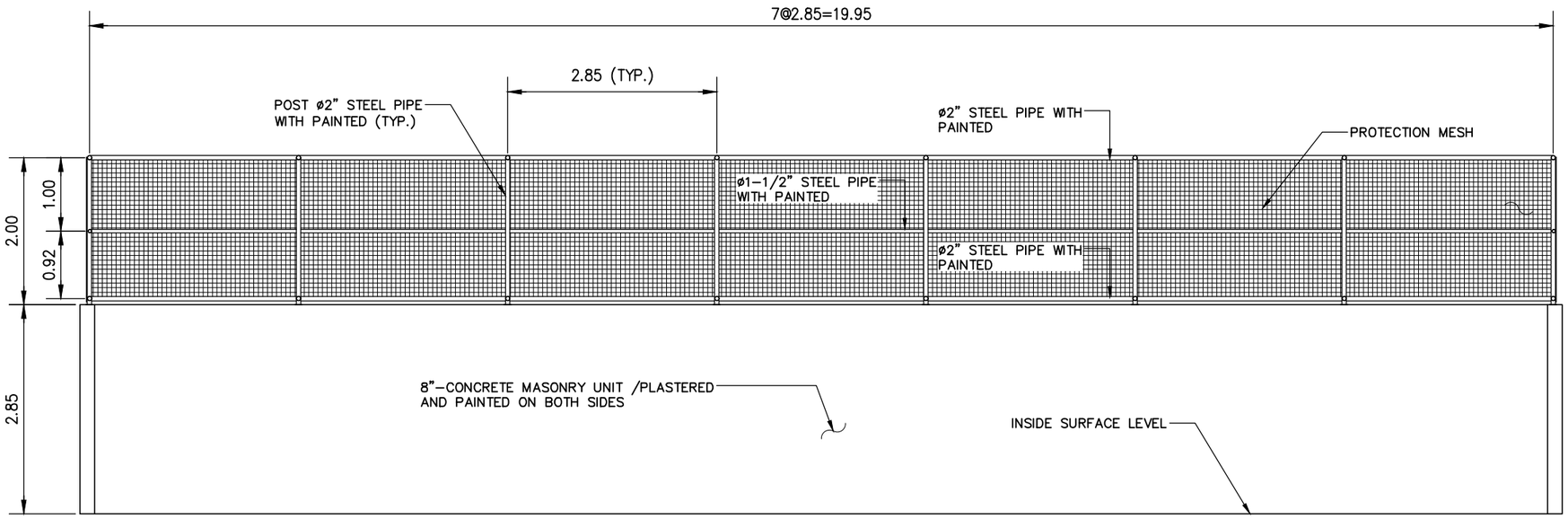

NORTH ELEVATION

SCALE 1:75

SBU SENSITIVE BUT UNCLASSIFIED

DEPARTMENT OF STATE
UNITED STATES OF AMERICA

FACILITIES MANAGEMENT
BANGKOK THAILAND

THIS DOCUMENT IS THE PROPERTY OF THE U.S. GOVERNMENT. FURTHER REPRODUCTION AND/OR DISTRIBUTION IS PROHIBITED WITHOUT THE EXPRESS WRITTEN PERMISSION OF: OFFICE OF OVERSEAS BUILDINGS OPERATIONS, U.S. DEPARTMENT OF STATE, WASHINGTON DC, 20522-0620. INFORMATION ON THIS DOCUMENT IS NOT TO BE ALTERED EXCEPT WITH THE WRITTEN APPROVAL OF THE INDIVIDUAL WHOSE SEAL APPEARS HEREON.

APPROVED BY

DATE: / /

FACILITIES MANAGEMENT ACKNOWLEDGEMENT

DATE: / /

REV. NO.	DATE	DESCRIPTION

ARCHITECT: FACILITIES MANAGEMENT

ENGINEER(S): FACILITIES MANAGEMENT

PROJECT TITLE: DILI COMPOUND TENNIS COURT PERIMETER WALL REPLACEMENT

DRAWING TITLE: WEST, EAST AND NORTH ELEVATION

DRAWN BY: TP.	DATE: JUL 16, 2020
CHECKED BY: SS.	DATE: JUL 16, 2020

SCALE: 1:75

DWG NO.: G-06

CADD FILE: Tennis Court Perimeter wall.dwg

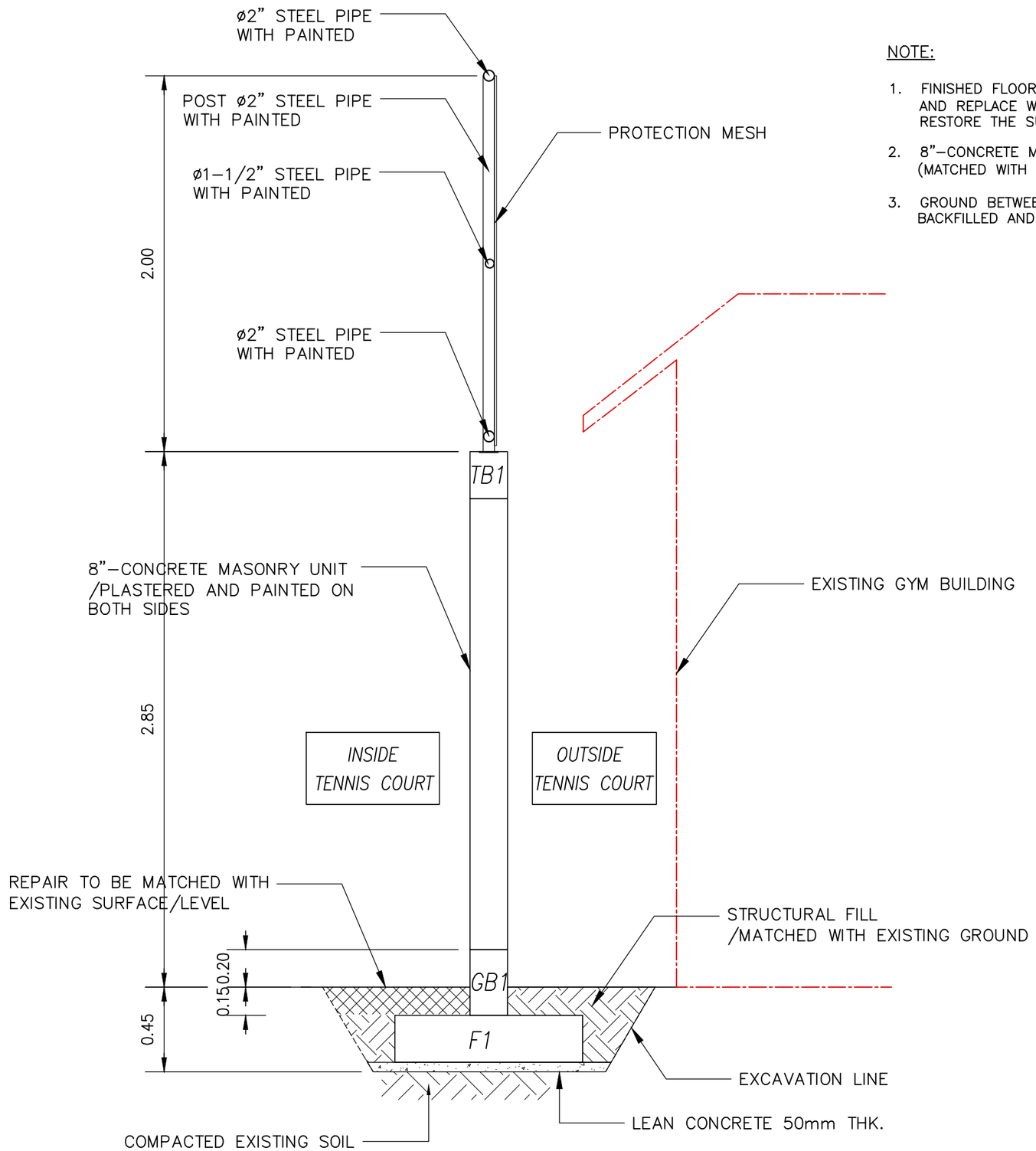

PERIMETER WALL SECTION

SCALE 1:25

NOTE:

1. FINISHED FLOOR TO BE VERIFIED ON SITE. EXCAVATE EXISTING SOIL AND REPLACE W/ STRUCTURAL FILL OR SELECTED MATERIAL AND RESTORE THE SURFACE MATCHING WITH EXISTING.
2. 8"–CONCRETE MASONRY UNIT WALL TO BE PLASTERED AND PAINTED (MATCHED WITH EXISTING OR ADJACENT BUILDING) ON BOTH SIDES .
3. GROUND BETWEEN NEW PERIMETER WALL AND EXISTING GYM MUST BE BACKFILLED AND LEVELED TO MATCH WITH EXISTING .

SBU SENSITIVE BUT UNCLASSIFIED

FACILITIES MANAGEMENT
BANGKOK THAILAND

THIS DOCUMENT IS THE PROPERTY OF THE U.S. GOVERNMENT. FURTHER REPRODUCTION AND/OR DISTRIBUTION IS PROHIBITED WITHOUT THE EXPRESS WRITTEN PERMISSION OF: OFFICE OF OVERSEAS BUILDINGS OPERATIONS, U.S. DEPARTMENT OF STATE, WASHINGTON DC, 20522-0620. INFORMATION ON THIS DOCUMENT IS NOT TO BE ALTERED EXCEPT WITH THE WRITTEN APPROVAL OF THE INDIVIDUAL WHOSE SEAL APPEARS HEREON.

APPROVED BY

DATE: / /

FACILITIES MANAGEMENT ACKNOWLEDGEMENT

DATE: / /

REV. NO.	DATE	DESCRIPTION

ARCHITECT: FACILITIES MANAGEMENT

ENGINEER(S): FACILITIES MANAGEMENT

PROJECT TITLE: DILI COMPOUND TENNIS COURT PERIMETER WALL REPLACEMENT

DRAWING TITLE: FOOTING, COLUMN, GROUND BEAM PLAN

DRAWN BY: TP.	DATE: JUL 16, 2020
CHECKED BY: SS.	DATE: JUL 16, 2020

SCALE: 1:25

DWG NO.: G-07

CADD FILE: Tennis Court Perimeter wall.dwg

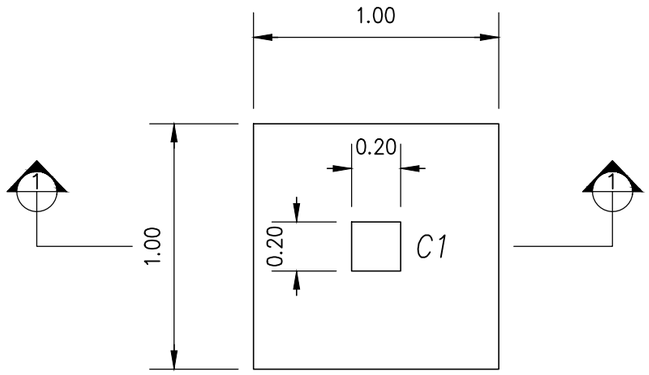

FOOTING F1 PLAN
SCALE 1:25

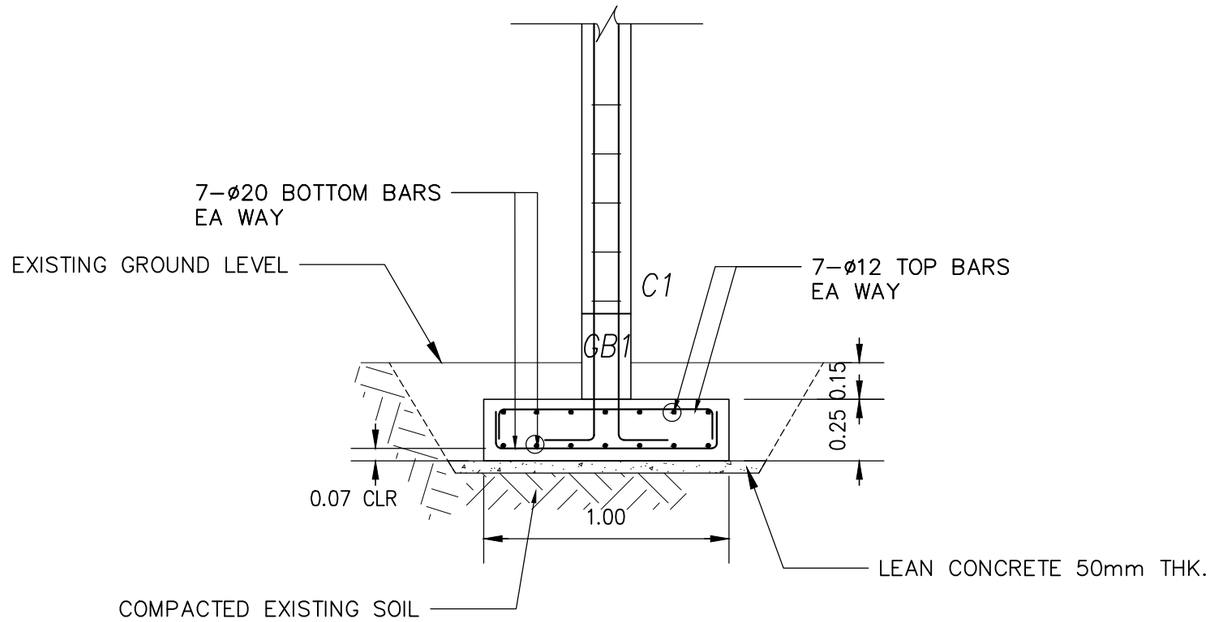

FOOTING F1 SECTION
SCALE 1:25

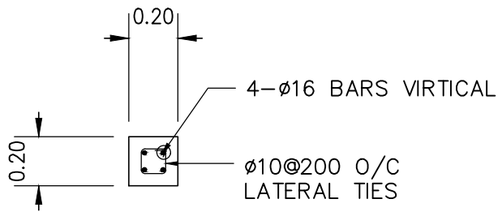

COLUMN DETAILS
SCALE 1:25

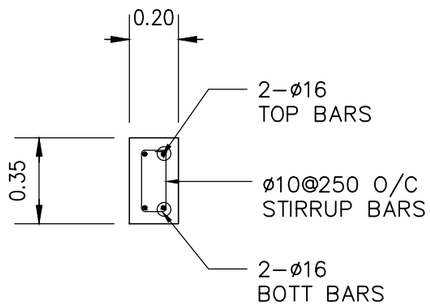

GROUND BEAM DETAILS
SCALE 1:25

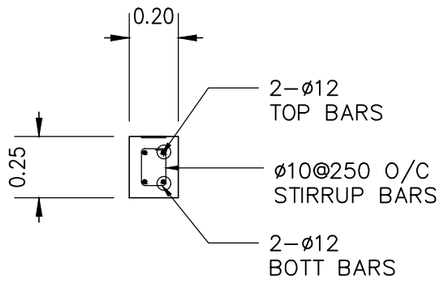

TOP BEAM DETAILS
SCALE 1:25

NOTE:

1. FINISHED FLOOR TO BE VERIFIED ON SITE. EXCAVATE EXISTING SOIL AND REPLACE W/ STRUCTURAL FILL OR SELECTED MATERIAL AND RESTORE THE SURFACE MATCHING WITH EXISTING.
2. CONCRETE f'c = 240 KG/CM2
3. FOR UNDERGROUND STRUCTURE SUCH AS FOOTING, CLEAR SURFACE SHALL BE 70 mm, AND 30 mm FOR OTHER STRUCTURES .

SBU SENSITIVE BUT UNCLASSIFIED

FACILITIES MANAGEMENT
BANGKOK THAILAND

THIS DOCUMENT IS THE PROPERTY OF THE U.S. GOVERNMENT. FURTHER REPRODUCTION AND/OR DISTRIBUTION IS PROHIBITED WITHOUT THE EXPRESS WRITTEN PERMISSION OF: OFFICE OF OVERSEAS BUILDINGS OPERATIONS, U.S. DEPARTMENT OF STATE, WASHINGTON DC, 20522-0620. INFORMATION ON THIS DOCUMENT IS NOT TO BE ALTERED EXCEPT WITH THE WRITTEN APPROVAL OF THE INDIVIDUAL WHOSE SEAL APPEARS HEREON.

APPROVED BY

DATE: / /

FACILITIES MANAGEMENT ACKNOWLEDGEMENT

DATE: / /

REV. NO.	DATE	DESCRIPTION

ARCHITECT: FACILITIES MANAGEMENT

ENGINEER(S): FACILITIES MANAGEMENT

PROJECT TITLE: DILI COMPOUND TENNIS COURT PERIMETER WALL REPLACEMENT

DRAWING TITLE: FOOTING, COLUMN, GROUND BEAM AND TOP BEAM DETAILS

DRAWN BY: TP.	DATE: JUL 16, 2020
CHECKED BY: SS.	DATE: JUL 16, 2020

SCALE: 1:25

DWG NO.: G-08

CADD FILE: Tennis Court Perimeter wall.dwg