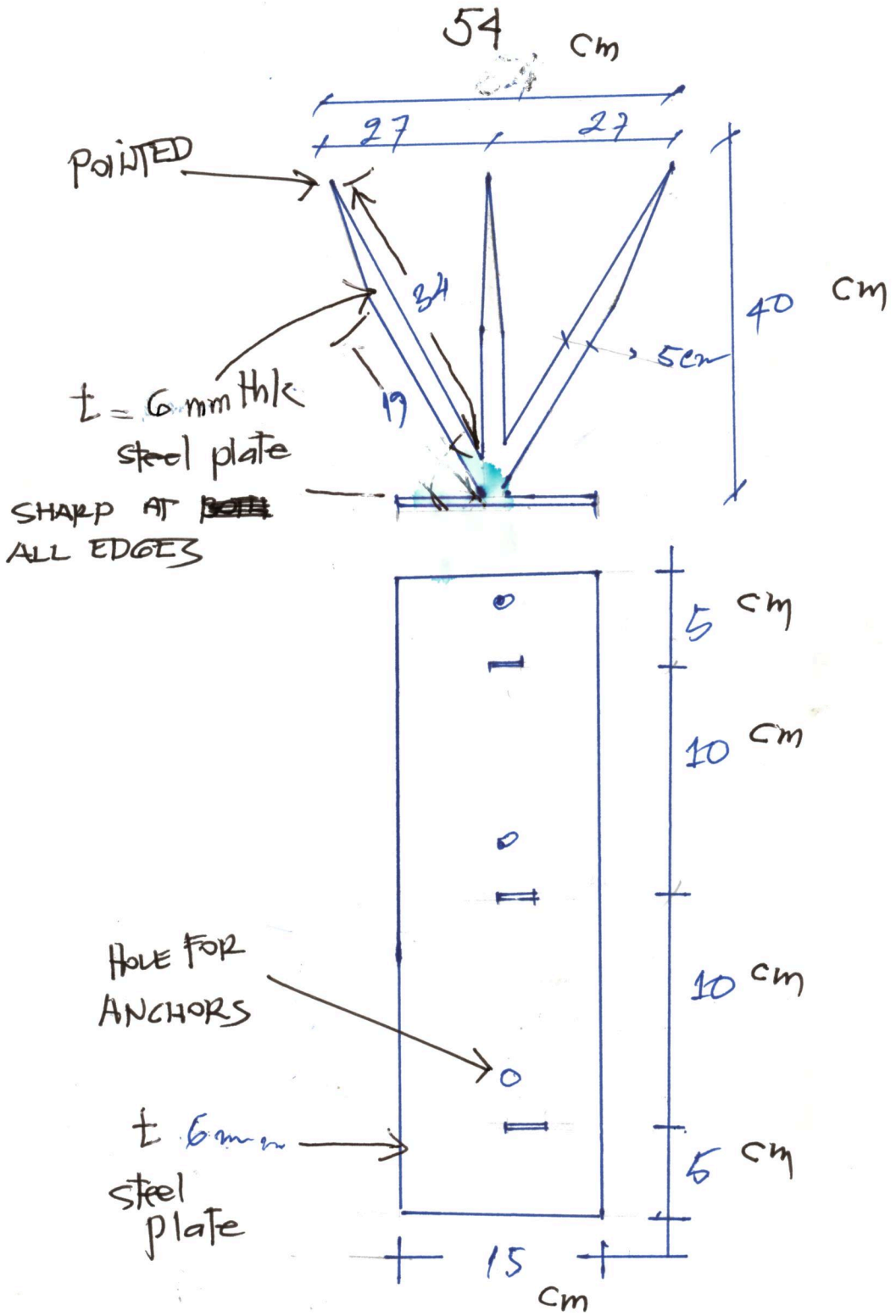

HOT-DIP GALVANIZED
WALL SPIKES